玄云动力
SWIWIN TURBINE

SWIWIN SW80B
Technical specifications

（A/0）

SWIWIN SW80B List of engine accessories

Serial number	Name	Picture specification	Quantity
1	Engine body		one
2	ECU（V3）		one
3	GSU		one
4	Fixiture		one
5	Brushless fuel pump		one
6	Power cable		one
7	Signal cable		one

8	Throttle cable		one
9	Switch valve		one
10	Filter		one
11	Tubing		1.5m

Technical parameter

Model	SW80B
Thrust	8kg
Diameter	83mm
Length	200mm
Engine Weight	800g
ECU weight	42g
Total weight（including accessories）	1120g
Usage temperature	-40℃~50℃
Supply voltage	3S Lipo battery
Starting system	One-button electronic start
Rpm Range	50000-156000
Exhaust Temperature	750℃
Fuel Consumption	300g/min
Fuel	kerosene
Lube oil	3%~5%
Maintenance Interval	25H

Engine start parameters

Pump Voltage	0.6-0.9V
RPM Start Up Ramp	100%
Pump Start Up Ramp	3
Glow Plug	5-7V
Valve	40
Ignition RPM	6000
Preheat RPM	10000
RPM Off Starter	28000

Engine operating parameters

RPM ACC	15
RPM DEC	15
Max RPM	156000
Idle RPM	50000
Minimum speed	35000
Max Temp	1000
Low Volt	10V
Restart	close
Restart Glow Plug	Consistent with the voltage of the burner
Pump Limit	13V

Engine cooling parameters

Cool	5000rpm

Starting motor parameters

Pop-up time	0.5S
Ejection voltage	3.5V
Run Voltage	3.5V

Note: All data are measured at standard air pressure.
When the ambient temperature is too high or the oxygen content in the air is low, too fast acceleration and deceleration will easily lead to flameout failure.

System connection diagram

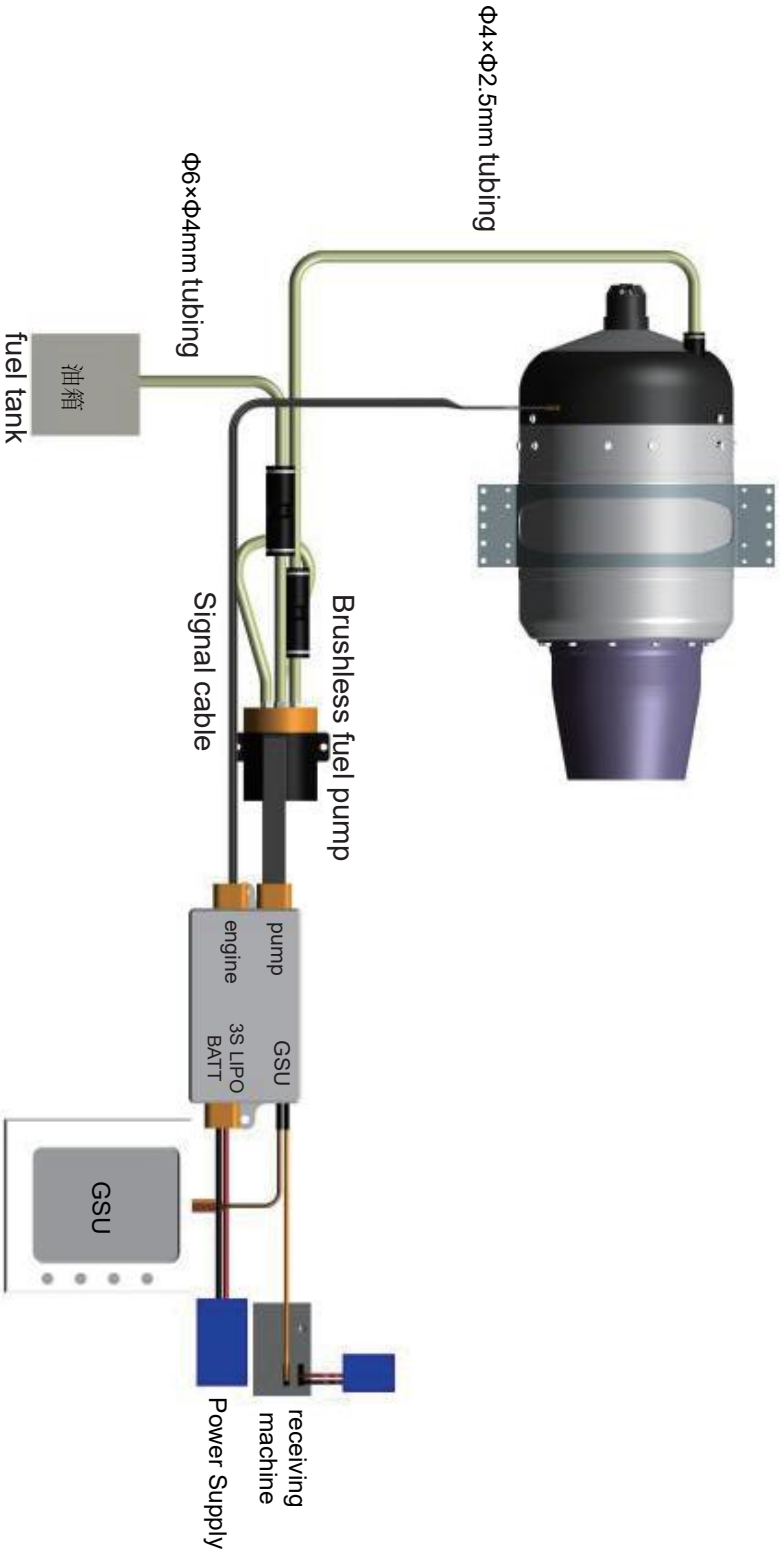

Product dimension diagram

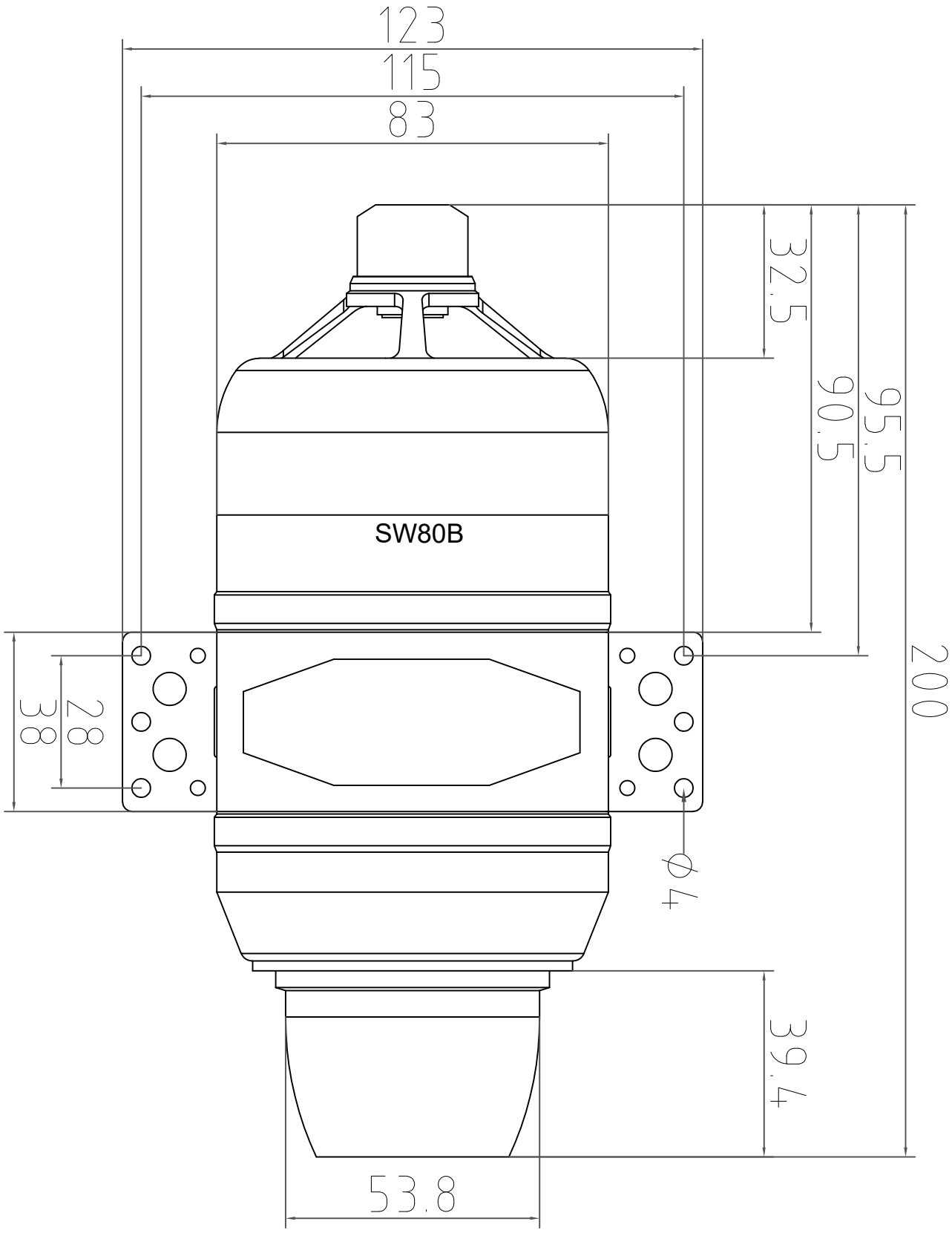

Disclaimer

This product is limited to use in entertainment and civil fields such as aerial model toy flying, competitions, performances, firefighting, road drying and cleaning.

Please strictly follow the provisions of the Export Control Law of People's Republic of China (PRC).It is strictly forbidden to modify the product for illegal use.It is strictly prohibited to resell the product to the export restriction country under the law in china.

Otherwise, all consequences will be at your own risk.